INVITATION FOR BID

ISSUING OFFICE:

GENERAL SERVICES AGENCY
GOVERNMENT OF GUAM
148 ROUTE 1, MARINE DRIVE
PITI, GUAM 96915

CLAUDIA S. ACFALLE
Chief Procurement Officer

DATE ISSUED: JUNE 10, 2015

BID INVITATION NO: GSA-069-15

BID FOR: **Fish Aggregating Device (FAD) System – 500 & 1000 Fathom**

SPECIFICATION: **SEE ATTACHED**

DESTINATION: **DEPARTMENT OF AGRICULTURE - FISHERIES**

REQUIRED DELIVERY DATE: **30 Days Upon Receipt of Purchase Order.**

INSTRUCTION TO BIDDERS:

INDICATE WHETHER: ____ INDIVIDUAL ____ PARTNERSHIP ____ CORPORATION

INCORPORATED IN: _____

This bid shall be submitted in duplicate and sealed to the issuing office above no later than (Time) 2:00PM Date: 6/25/15 and shall be publicly opened. Bid submitted after the time and date specified above shall be rejected. See attached General Terms and Conditions, and Sealed Bid Solicitation for details.

The undersigned offers and agrees to furnish within the time specified, the articles and services at the price stated opposite the respective items listed on the schedule provided, unless otherwise specified by the bidder. In consideration to the expense of the Government in opening, tabulating, and evaluating this and other bids, and other considerations, the undersigned agrees that this bid remain firm and irrevocable within 60 calendar days from the date opening to supply any or all the items which prices are quoted.

NAME AND ADDRESS OF BIDDER:

_____

_____

_____

SIGNATURE AND TITLE OF PERSON AUTHORIZED TO SIGN THIS BID:

_____

AWARD: CONTRACT NO.: _____ **AMOUNT:** _____ **DATE:** _____

ITEM NO(S). AWARDED: _____

CONTRACTING OFFICER:

_____

CLAUDIA S. ACFALLE
Chief Procurement Officer

NAME AND ADDRESS OF CONTRACTOR:

_____

_____

_____

SIGNATURE AND TITLE OF PERSON AUTHORIZED TO SIGN THIS CONTRACT:

_____

GSA GENERAL SERVICES AGENCY
(Ahensian Setbision Hinirat)
Government of Guam
148 Route 1 Marine Drive, Piti Guam 96915
Tel: 475-1713 * Telefax: 472-4217; 475-1716; 475-1727

Accountability * Impartiality * Competence * Openness * Value

INVITATION FOR BID NO. : GSA-069-15

DESCRIPTION:

Fish Aggregating Device (FAD) System
500 & 1000 Fathom

SPECIAL REMINDER TO PROSPECTIVE BIDDERS

Bidders are reminded to read the Sealed Bid Solicitation and Instructions, and General Terms and Conditions attached to the IFB to ascertain that all of the following requirements checked below are submitted in the bid envelope, in duplicate, at the date and time for bid opening.

(X) BID GUARANTEE (15% of Bid Amount) May be in the form of;
Reference #11 on the General Terms and Conditions

a. Cashier's Check or Certified Check

b. Letter of Credit

c. Surety Bond – Valid only if accompanied by:

1. Current Certificate of Authority issued by the Insurance Commissioner;
2. Power of Attorney issued by the Surety to the Resident General Agent;
3. Power of Attorney issued by two (2) major officers of the Surety to whoever is signing on their behalf.

(X) STATEMENT OF QUALIFICATIONS

(X) BROCHURES/DESCRIPTIVE LITERATURE;

(X) AFFIDAVIT DISCLOSING OWNERSHIP and COMMISSION

a. Date of signature of the person authorized to sign the bid and the notary date must be the same.

(X) OTHER REQUIREMENTS:
Non-Collusion Affidavit, D.O.L. Wage Determination Affidavit, Restriction against Sexual Offenders Affidavit, No Kickbacks or Gratuities Affidavit and Ethical Standards Affidavit, and Affidavit re Contingent Fees, Current Business License

This reminder must be signed and returned in the bid envelope together with the bid. Failure to comply with the above requirements may be cause for disqualification and rejection of the bid.

On this _____ day of _____, 2015, I, _____,

authorized representative of _____ acknowledge receipt of this special reminder to prospective bidders with the above referenced IFB.

_____
Bidder Representative's Signature

DOA 132 Rev: 1/95

Invitation for Bid: GSA–069–15

Fish Aggregating Device (FAD) System
500 & 1000 Fathom

ACKNOWLEDGEMENT RECEIPT FORM

Please be advised that to be considered a prospective bidder you must fill out this Acknowledgement receipt form. Please submit by fax form to **475-1727**

Acknowledgement Receipt Form must be submitted no later than three (3) days upon receipt of IFB package.

Name _____

Signature _____

Date _____

Time _____

Contact Number _____

Fax Number _____

Contact Person regarding IFB _____

Title _____

E-Mail Address _____

Company/Firm _____

Address _____

Note: GSA recommends that prospective bidders register current contact Information with GSA to ensure they receive any notices regarding any changes or update to the IFB. The procuring agency and GSA will not be liable for failure to provide notice to any party who did not register current contact information.

All questions and concerns in regards to this bid must be submitted via fax attention to the Chief Procurement Officer no later than June 19, 2015 close of business.

AFFIDAVIT RE ETHICAL STANDARDS

CITY OF _____)
) ss.
ISLAND OF GUAM)

_____[*state name of affiant signing below*], being first duly sworn, deposes and says that:

The affiant is _____ [*state one of the following: the offeror, a partner of the offeror, an officer of the offeror*] making the foregoing identified bid or proposal. To the best of affiant's knowledge, neither affiant nor any officers, representatives, agents, subcontractors or employees of offeror have knowingly influenced any government of Guam employee to breach any of the ethical standards set forth in 5 GCA Chapter 5, Article 11. Further, affiant promises that neither he or she, nor any officer, representative, agent, subcontractor, or employee of offeror will knowingly influence any government of Guam employee to breach any ethical standards set forth in 5 GCA Chapter 5, Article 11. These statements are made pursuant to 2 GAR Division 4 § 11103(b).

_____
Signature of one of the following:
Offeror, if the offeror is an individual;
Partner, if the offeror is a partnership;
Officer, if the offeror is a corporation.

Subscribed and sworn to before me
this _____ day of _____, 201__.

_____
NOTARY PUBLIC
My commission expires _____, _____.

AFFIDAVIT re NO GRATUITIES or KICKBACKS

CITY OF _____)
) ss.
ISLAND OF GUAM)

_____[*state name of affiant signing below*], being first duly sworn, deposes and says that:

1. The name of the offering firm or individual is [*state name of offeror company*] _____. Affiant is _____ [*state one of the following: the offeror, a partner of the offeror, an officer of the offeror*] making the foregoing identified bid or proposal.

2. To the best of affiant's knowledge, neither affiant, nor any of the offerors officers, representatives, agents, subcontractors, or employees have violated, are violating the prohibition against gratuities and kickbacks set forth in 2 GAR Division 4 § 11107(e). Further, affiant promises, on behalf of offeror, not to violate the prohibition against gratuities and kickbacks as set forth in 2 GAR Division 4 § 11107(e).

3. To the best of affiant's knowledge, neither affiant, nor any of the offerors officers, representatives, agents, subcontractors, or employees have offered, given or agreed to give, any government of Guam employee or former government employee, any payment, gift, kickback, gratuity or offer of employment in connection with the offerors proposal.

4. I make these statements on behalf of myself as a representative of the offeror, and on behalf of the offerors officers, representatives, agents, subcontractors, and employees.

_____
Signature of one of the following:
Offeror, if the offeror is an individual;
Partner, if the offeror is a partnership;
Officer, if the offeror is a corporation.

Subscribed and sworn to before me

this _____ day of _____, 201__.

_____
NOTARY PUBLIC
My commission expires _____, _____.

Special Provisions

Restriction against Sex Offenders Employed by service providers to Government of Guam from working on Government Property.

If a contract for services is awarded to the bidder or offeror, then the service provider must warranty that no person in its employment who has been convicted of a sex offense under the provisions of chapter 25 of Title 9 of Guam code Annotated or of an offense defined in Article 2 of chapter 28 of Title 9 of the Guam Code annotated, or who has been convicted in any other jurisdiction of an offense with the same elements as heretofore defined, or who is listed on the Sex Offender Registry, shall provide services on behalf of the service provider while on government of Guam property, with the exception of public highways. If any employee of a service provider is providing services on government property and is convicted subsequent to an award of a contract, then the service provider warrants that it will notify the Government of the conviction within twenty-four (24) hours of the conviction, and will immediately remove such convicted person from providing services on government property. If the service provider is found to be in violation of any of the provisions of this paragraph, then the government will give notice to the service provider to take corrective action. The service provider shall take corrective action within twenty-four (24) hours of notice from the Government, and the service provider shall notify the Government when action has been taken. If the service providers fail to take corrective steps within twenty-four (24) hours of notice from the Government, then the Government in its sole discretion may suspend temporarily and contract for services until corrective action has been taken.

_____

Signature of Bidder Date
Proposer, if an individual;
Partner, if a partnership;
Officer, if a corporation.

Subscribed and sworn before me this _____ day of _____, 2015

_____

Notary Public

FORM E

DECLARATION RE COMPLIANCE WITH U.S. D.O.L. WAGE DETERMINATION

Procurement No: **GSA-69-15**
Fish Aggregating Device (FAD) System – 500 & 1000 Fathom

Name of Offeror Company: _____ hereby certifies under penalty of perjury:

(1) That I am _____(the offeror, a partner of the offeror, an officer of the offeror) making the bid or proposal in the foregoing identified procurement;

(2) That I have read and understand the provisions of 5 GCA § 5801 and § 5802 which read:

§ 5801. Wage Determination Established.

In such cases where the government of Guam enters into contractual arrangements with a sole proprietorship, a partnership or a corporation ("contractor") for the provision of a service to the government of Guam, and in such cases where the contractor employs a person(s) whose purpose, in whole or in part, is the direct delivery of service contracted by the government of Guam, then the contractor shall pay such employee(s) in accordance with the Wage Determination for Guam and the Northern Mariana Islands issued and promulgated by the U.S. Department of Labor for such labor as is employed in the direct delivery of contract deliverables to the government of Guam.

The Wage Determination most recently issued by the U.S. Department of Labor at the time a contract is awarded to a contractor by the government of Guam shall be used to determine wages, which shall be paid to employees pursuant to this Article. Should any contract contain a renewal clause, then at the time of renewal adjustments, there shall be made stipulations contained in that contract for applying the Wage Determination, as required by this Article, so that the Wage Determination promulgated by the U.S. Department of Labor on a date most recent to the renewal date shall apply.

§ 5802. Benefits.

In addition to the Wage Determination detailed in this Article, any contract to which this Article applies shall also contain provisions mandating health and similar benefits for employees covered by this Article, such benefits having a minimum value as detailed in the Wage Determination issued and promulgated by the U.S. Department of Labor, and shall contain provisions guaranteeing a minimum of ten (10) paid holidays per annum per employee.

(3) That the offeror is in full compliance with 5 GCA § 5801 and § 5802, as may be applicable to the procurement referenced herein;

(4) That I have attached the most recent wage determination applicable to Guam issued by the U.S. Department of Labor. [INSTRUCTIONS – Please attach!]

_____
Signature Date

WD 05-2147 (Rev.-17) was first posted on www.wdol.gov on 12/30/2014
****

REGISTER OF WAGE DETERMINATIONS UNDER THE SERVICE CONTRACT ACT By direction of the Secretary of Labor	U.S. DEPARTMENT OF LABOR EMPLOYMENT STANDARDS ADMINISTRATION WAGE AND HOUR DIVISION WASHINGTON D.C. 20210
Diane C. Koplewski Director — Division of Wage Determinations	Wage Determination No.: 2005-2147 Revision No.: 17 Date Of Revision: 12/22/2014

Note: Executive Order (EO) 13658 establishes an hourly minimum wage of $10.10 for 2015 that applies to all contracts subject to the Service Contract Act for which the solicitation is issued on or after January 1, 2015. If this contract is covered by the EO, the contractor must pay all workers in any classification listed on this wage determination at least $10.10 (or the applicable wage rate listed on this wage determination, if it is higher) for all hours spent performing on the contract. The EO minimum wage rate will be adjusted annually. Additional information on contractor requirements and worker protections under the EO is available at www.dol.gov/whd/govcontracts.

States: Guam, Northern Marianas, Wake Island

Area: Guam Statewide
Northern Marianas Statewide
Wake Island Statewide

Fringe Benefits Required Follow the Occupational Listing

OCCUPATION CODE - TITLE	FOOTNOTE	RATE
01000 - Administrative Support And Clerical Occupations		
01011 - Accounting Clerk I		12.50
01012 - Accounting Clerk II		13.53
01013 - Accounting Clerk III		15.59
01020 - Administrative Assistant		17.67
01040 - Court Reporter		15.38
01051 - Data Entry Operator I		10.48
01052 - Data Entry Operator II		11.99
01060 - Dispatcher, Motor Vehicle		13.06
01070 - Document Preparation Clerk		12.25
01090 - Duplicating Machine Operator		12.25
01111 - General Clerk I		10.29
01112 - General Clerk II		11.28
01113 - General Clerk III		12.32
01120 - Housing Referral Assistant		17.15
01141 - Messenger Courier		10.12
01191 - Order Clerk I		11.23
01192 - Order Clerk II		12.25
01261 - Personnel Assistant (Employment) I		14.33
01262 - Personnel Assistant (Employment) II		14.90
01263 - Personnel Assistant (Employment) III		16.48
01270 - Production Control Clerk		18.34
01280 - Receptionist		9.67
01290 - Rental Clerk		11.10
01300 - Scheduler, Maintenance		13.75
01311 - Secretary I		13.75
01312 - Secretary II		15.38
01313 - Secretary III		17.15
01320 - Service Order Dispatcher		11.57
01410 - Supply Technician		17.67
01420 - Survey Worker		15.26
01531 - Travel Clerk I		11.61
01532 - Travel Clerk II		12.57
01533 - Travel Clerk III		13.44
01611 - Word Processor I		12.25
01612 - Word Processor II		13.75
01613 - Word Processor III		15.38
05000 - Automotive Service Occupations		
05005 - Automobile Body Repairer, Fiberglass		13.34
05010 - Automotive Electrician		13.06
05040 - Automotive Glass Installer		12.10
05070 - Automotive Worker		12.10
05110 - Mobile Equipment Servicer		8.59

05130 - Motor Equipment Metal Mechanic	13.06
05160 - Motor Equipment Metal Worker	12.10
05190 - Motor Vehicle Mechanic	13.06
05220 - Motor Vehicle Mechanic Helper	10.12
05250 - Motor Vehicle Upholstery Worker	12.10
05280 - Motor Vehicle Wrecker	12.10
05310 - Painter, Automotive	12.37
05340 - Radiator Repair Specialist	12.10
05370 - Tire Repairer	7.81
05400 - Transmission Repair Specialist	12.10
07000 - Food Preparation And Service Occupations	
07010 - Baker	10.47
07041 - Cook I	9.54
07042 - Cook II	11.78
07070 - Dishwasher	7.25
07130 - Food Service Worker	7.78
07210 - Meat Cutter	11.86
07260 - Waiter/Waitress	7.59
09000 - Furniture Maintenance And Repair Occupations	
09010 - Electrostatic Spray Painter	14.38
09040 - Furniture Handler	8.85
09080 - Furniture Refinisher	14.38
09090 - Furniture Refinisher Helper	10.66
09110 - Furniture Repairer, Minor	12.51
09130 - Upholsterer	14.38
11000 - General Services And Support Occupations	
11030 - Cleaner, Vehicles	8.23
11060 - Elevator Operator	8.23
11090 - Gardener	10.99
11122 - Housekeeping Aide	8.33
11150 - Janitor	8.23
11210 - Laborer, Grounds Maintenance	9.14
11240 - Maid or Houseman	7.25
11260 - Pruner	8.23
11270 - Tractor Operator	10.33
11330 - Trail Maintenance Worker	9.14
11360 - Window Cleaner	9.14
12000 - Health Occupations	
12010 - Ambulance Driver	15.81
12011 - Breath Alcohol Technician	15.81
12012 - Certified Occupational Therapist Assistant	21.70
12015 - Certified Physical Therapist Assistant	21.70
12020 - Dental Assistant	13.20
12025 - Dental Hygienist	29.85
12030 - EKG Technician	23.96
12035 - Electroneurodiagnostic Technologist	23.96
12040 - Emergency Medical Technician	15.81
12071 - Licensed Practical Nurse I	14.14
12072 - Licensed Practical Nurse II	15.81
12073 - Licensed Practical Nurse III	17.63
12100 - Medical Assistant	11.54
12130 - Medical Laboratory Technician	14.14
12160 - Medical Record Clerk	11.82
12190 - Medical Record Technician	13.59
12195 - Medical Transcriptionist	14.14
12210 - Nuclear Medicine Technologist	34.75
12221 - Nursing Assistant I	10.03
12222 - Nursing Assistant II	11.30
12223 - Nursing Assistant III	12.31
12224 - Nursing Assistant IV	13.84
12235 - Optical Dispenser	15.81
12236 - Optical Technician	14.14
12250 - Pharmacy Technician	13.41
12280 - Phlebotomist	13.84
12305 - Radiologic Technologist	22.64
12311 - Registered Nurse I	20.70
12312 - Registered Nurse II	25.32
12313 - Registered Nurse II, Specialist	25.32
12314 - Registered Nurse III	30.64
12315 - Registered Nurse III, Anesthetist	30.64
12316 - Registered Nurse IV	36.72
12317 - Scheduler (Drug and Alcohol Testing)	19.59
13000 - Information And Arts Occupations	
13011 - Exhibits Specialist I	15.06
13012 - Exhibits Specialist II	18.66

13013 - Exhibits Specialist III		22.83
13041 - Illustrator I		15.06
13042 - Illustrator II		18.66
13043 - Illustrator III		22.83
13047 - Librarian		20.66
13050 - Library Aide/Clerk		12.00
13054 - Library Information Technology Systems Administrator		18.66
13058 - Library Technician		15.06
13061 - Media Specialist I		13.46
13062 - Media Specialist II		15.06
13063 - Media Specialist III		16.80
13071 - Photographer I		12.82
13072 - Photographer II		14.32
13073 - Photographer III		17.75
13074 - Photographer IV		21.73
13075 - Photographer V		26.30
13110 - Video Teleconference Technician		12.91
14000 - Information Technology Occupations		
14041 - Computer Operator I		13.65
14042 - Computer Operator II		15.76
14043 - Computer Operator III		17.56
14044 - Computer Operator IV		19.50
14045 - Computer Operator V		21.81
14071 - Computer Programmer I	(see 1)	15.73
14072 - Computer Programmer II	(see 1)	19.50
14073 - Computer Programmer III	(see 1)	23.84
14074 - Computer Programmer IV	(see 1)	
14101 - Computer Systems Analyst I	(see 1)	24.23
14102 - Computer Systems Analyst II	(see 1)	
14103 - Computer Systems Analyst III	(see 1)	
14150 - Peripheral Equipment Operator		13.65
14160 - Personal Computer Support Technician		19.50
15000 - Instructional Occupations		
15010 - Aircrew Training Devices Instructor (Non-Rated)		24.23
15020 - Aircrew Training Devices Instructor (Rated)		29.32
15030 - Air Crew Training Devices Instructor (Pilot)		33.30
15050 - Computer Based Training Specialist / Instructor		24.23
15060 - Educational Technologist		22.82
15070 - Flight Instructor (Pilot)		33.30
15080 - Graphic Artist		20.47
15090 - Technical Instructor		17.65
15095 - Technical Instructor/Course Developer		21.58
15110 - Test Proctor		13.87
15120 - Tutor		13.87
16000 - Laundry, Dry-Cleaning, Pressing And Related Occupations		
16010 - Assembler		8.08
16030 - Counter Attendant		8.08
16040 - Dry Cleaner		9.34
16070 - Finisher, Flatwork, Machine		8.08
16090 - Presser, Hand		8.08
16110 - Presser, Machine, Drycleaning		8.08
16130 - Presser, Machine, Shirts		8.08
16160 - Presser, Machine, Wearing Apparel, Laundry		8.08
16190 - Sewing Machine Operator		9.86
16220 - Tailor		10.33
16250 - Washer, Machine		8.46
19000 - Machine Tool Operation And Repair Occupations		
19010 - Machine-Tool Operator (Tool Room)		14.49
19040 - Tool And Die Maker		18.20
21000 - Materials Handling And Packing Occupations		
21020 - Forklift Operator		12.49
21030 - Material Coordinator		18.34
21040 - Material Expediter		18.34
21050 - Material Handling Laborer		10.65
21071 - Order Filler		9.66
21080 - Production Line Worker (Food Processing)		12.49
21110 - Shipping Packer		13.33
21130 - Shipping/Receiving Clerk		13.33
21140 - Store Worker I		13.23
21150 - Stock Clerk		18.58
21210 - Tools And Parts Attendant		12.49
21410 - Warehouse Specialist		12.49
23000 - Mechanics And Maintenance And Repair Occupations		
23010 - Aerospace Structural Welder		20.69

23021 - Aircraft Mechanic I	19.70
23022 - Aircraft Mechanic II	20.69
23023 - Aircraft Mechanic III	21.74
23040 - Aircraft Mechanic Helper	13.70
23050 - Aircraft, Painter	18.50
23060 - Aircraft Servicer	16.09
23080 - Aircraft Worker	17.38
23110 - Appliance Mechanic	14.49
23120 - Bicycle Repairer	9.74
23125 - Cable Splicer	15.43
23130 - Carpenter, Maintenance	13.00
23140 - Carpet Layer	13.55
23160 - Electrician, Maintenance	14.99
23181 - Electronics Technician Maintenance I	14.72
23182 - Electronics Technician Maintenance II	15.05
23183 - Electronics Technician Maintenance III	18.31
23260 - Fabric Worker	12.60
23290 - Fire Alarm System Mechanic	15.43
23310 - Fire Extinguisher Repairer	11.67
23311 - Fuel Distribution System Mechanic	15.43
23312 - Fuel Distribution System Operator	13.01
23370 - General Maintenance Worker	11.95
23380 - Ground Support Equipment Mechanic	19.70
23381 - Ground Support Equipment Servicer	16.09
23382 - Ground Support Equipment Worker	17.38
23391 - Gunsmith I	11.67
23392 - Gunsmith II	13.55
23393 - Gunsmith III	15.43
23410 - Heating, Ventilation And Air-Conditioning Mechanic	15.76
23411 - Heating, Ventilation And Air Conditioning Mechanic (Research Facility)	16.55
23430 - Heavy Equipment Mechanic	15.15
23440 - Heavy Equipment Operator	13.73
23460 - Instrument Mechanic	15.43
23465 - Laboratory/Shelter Mechanic	14.49
23470 - Laborer	10.65
23510 - Locksmith	14.49
23530 - Machinery Maintenance Mechanic	17.38
23550 - Machinist, Maintenance	15.43
23580 - Maintenance Trades Helper	9.92
23591 - Metrology Technician I	15.43
23592 - Metrology Technician II	16.41
23593 - Metrology Technician III	17.37
23640 - Millwright	15.43
23710 - Office Appliance Repairer	14.38
23760 - Painter, Maintenance	13.55
23790 - Pipefitter, Maintenance	15.32
23810 - Plumber, Maintenance	14.38
23820 - Pneudraulic Systems Mechanic	15.43
23850 - Rigger	15.43
23870 - Scale Mechanic	13.55
23890 - Sheet-Metal Worker, Maintenance	15.21
23910 - Small Engine Mechanic	13.55
23931 - Telecommunications Mechanic I	19.01
23932 - Telecommunications Mechanic II	19.76
23950 - Telephone Lineman	18.24
23960 - Welder, Combination, Maintenance	14.66
23965 - Well Driller	15.43
23970 - Woodcraft Worker	15.43
23980 - Woodworker	11.67
24000 - Personal Needs Occupations	
24570 - Child Care Attendant	10.09
24580 - Child Care Center Clerk	12.58
24610 - Chore Aide	12.43
24620 - Family Readiness And Support Services Coordinator	12.44
24630 - Homemaker	16.12
25000 - Plant And System Operations Occupations	
25010 - Boiler Tender	15.43
25040 - Sewage Plant Operator	14.49
25070 - Stationary Engineer	15.43
25190 - Ventilation Equipment Tender	10.73
25210 - Water Treatment Plant Operator	14.49
27000 - Protective Service Occupations	
27004 - Alarm Monitor	10.90

27007 - Baggage Inspector		7.35
27008 - Corrections Officer		12.05
27010 - Court Security Officer		12.05
27030 - Detection Dog Handler		10.90
27040 - Detention Officer		12.05
27070 - Firefighter		12.05
27101 - Guard I		7.37
27102 - Guard II		10.90
27131 - Police Officer I		12.05
27132 - Police Officer II		13.40
28000 - Recreation Occupations		
28041 - Carnival Equipment Operator		9.53
28042 - Carnival Equipment Repairer		10.08
28043 - Carnival Equipment Worker		7.78
28210 - Gate Attendant/Gate Tender		13.18
28310 - Lifeguard		11.01
28350 - Park Attendant (Aide)		14.74
28510 - Recreation Aide/Health Facility Attendant		10.76
28515 - Recreation Specialist		18.26
28630 - Sports Official		11.74
28690 - Swimming Pool Operator		17.71
29000 - Stevedoring/Longshoremen Occupational Services		
29010 - Blocker And Bracer		15.20
29020 - Hatch Tender		15.20
29030 - Line Handler		15.20
29041 - Stevedore I		14.22
29042 - Stevedore II		16.25
30000 - Technical Occupations		
30010 - Air Traffic Control Specialist, Center (HFO)	(see 2)	35.77
30011 - Air Traffic Control Specialist, Station (HFO)	(see 2)	24.66
30012 - Air Traffic Control Specialist, Terminal (HFO)	(see 2)	27.16
30021 - Archeological Technician I		17.49
30022 - Archeological Technician II		19.56
30023 - Archeological Technician III		24.21
30030 - Cartographic Technician		23.18
30040 - Civil Engineering Technician		21.93
30061 - Drafter/CAD Operator I		17.49
30062 - Drafter/CAD Operator II		19.56
30063 - Drafter/CAD Operator III		20.74
30064 - Drafter/CAD Operator IV		24.21
30081 - Engineering Technician I		14.62
30082 - Engineering Technician II		16.41
30083 - Engineering Technician III		18.36
30084 - Engineering Technician IV		22.34
30085 - Engineering Technician V		27.83
30086 - Engineering Technician VI		33.66
30090 - Environmental Technician		21.10
30210 - Laboratory Technician		20.74
30240 - Mathematical Technician		23.34
30361 - Paralegal/Legal Assistant I		19.06
30362 - Paralegal/Legal Assistant II		21.53
30363 - Paralegal/Legal Assistant III		26.35
30364 - Paralegal/Legal Assistant IV		30.80
30390 - Photo-Optics Technician		21.93
30461 - Technical Writer I		22.17
30462 - Technical Writer II		27.10
30463 - Technical Writer III		32.79
30491 - Unexploded Ordnance (UXO) Technician I		22.74
30492 - Unexploded Ordnance (UXO) Technician II		27.51
30493 - Unexploded Ordnance (UXO) Technician III		32.97
30494 - Unexploded (UXO) Safety Escort		22.74
30495 - Unexploded (UXO) Sweep Personnel		22.74
30620 - Weather Observer, Combined Upper Air Or Surface Programs	(see 2)	20.74
30621 - Weather Observer, Senior	(see 2)	23.00
31000 - Transportation/Mobile Equipment Operation Occupations		
31020 - Bus Aide		8.15
31030 - Bus Driver		9.69
31043 - Driver Courier		8.97
31260 - Parking and Lot Attendant		7.25
31290 - Shuttle Bus Driver		9.99
31310 - Taxi Driver		8.21
31361 - Truck driver, Light		8.97
31362 - Truck driver, Medium		11.61
31363 - Truck driver, Heavy		12.48
31364 - Truck driver, Tractor-Trailer		12.48

99000 - Miscellaneous Occupations	
99030 - Cashier	7.46
99050 - Desk Clerk	9.70
99095 - Embalmer	22.74
99251 - Laboratory Animal Caretaker I	16.24
99252 - Laboratory Animal Caretaker II	17.04
99310 - Mortician	22.74
99410 - Pest Controller	13.28
99510 - Photofinishing Worker	11.95
99710 - Recycling Laborer	10.76
99711 - Recycling Specialist	16.27
99730 - Refuse Collector	10.24
99810 - Sales Clerk	8.95
99820 - School Crossing Guard	15.03
99830 - Survey Party Chief	20.30
99831 - Surveying Aide	11.54
99832 - Surveying Technician	15.00
99840 - Vending Machine Attendant	20.19
99841 - Vending Machine Repairer	23.57
99842 - Vending Machine Repairer Helper	20.19

ALL OCCUPATIONS LISTED ABOVE RECEIVE THE FOLLOWING BENEFITS:

HEALTH & WELFARE: $4.02 per hour or $160.80 per week or $696.79 per month

VACATION: 2 weeks paid vacation after 1 year of service with a contractor or successor; and 4 weeks after 3 years. Length of service includes the whole span of continuous service with the present contractor or successor, wherever employed, and with the predecessor contractors in the performance of similar work at the same Federal facility. (Reg. 29 CFR 4.173)

HOLIDAYS: A minimum of ten paid holidays per year, New Year's Day, Martin Luther King Jr's Birthday, Washington's Birthday, Memorial Day, Independence Day, Labor Day, Columbus Day, Veterans' Day, Thanksgiving Day, and Christmas Day. (A contractor may substitute for any of the named holidays another day off with pay in accordance with a plan communicated to the employees involved.) (See 29 CFR 4174)

THE OCCUPATIONS WHICH HAVE NUMBERED FOOTNOTES IN PARENTHESES RECEIVE THE FOLLOWING:

1) COMPUTER EMPLOYEES: Under the SCA at section 8(b), this wage determination does not apply to any employee who individually qualifies as a bona fide executive, administrative, or professional employee as defined in 29 C.F.R. Part 541. Because most Computer System Analysts and Computer Programmers who are compensated at a rate not less than $27.63 (or on a salary or fee basis at a rate not less than $455 per week) an hour would likely qualify as exempt computer professionals, (29 C.F.R. 541. 400) wage rates may not be listed on this wage determination for all occupations within those job families. In addition, because this wage determination may not list a wage rate for some or all occupations within those job families if the survey data indicates that the prevailing wage rate for the occupation equals or exceeds $27.63 per hour conformances may be necessary for certain nonexempt employees. For example, if an individual employee is nonexempt but nevertheless performs duties within the scope of one of the Computer Systems Analyst or Computer Programmer occupations for which this wage determination does not specify an SCA wage rate, then the wage rate for that employee must be conformed in accordance with the conformance procedures described in the conformance note included on this wage determination.

Additionally, because job titles vary widely and change quickly in the computer industry, job titles are not determinative of the application of the computer professional exemption. Therefore, the exemption applies only to computer employees who satisfy the compensation requirements and whose primary duty consists of:

(1) The application of systems analysis techniques and procedures, including consulting with users, to determine hardware, software or system functional specifications;

(2) The design, development, documentation, analysis, creation, testing or modification of computer systems or programs, including prototypes, based on and related to user or system design specifications;

(3) The design, documentation, testing, creation or modification of computer programs related to machine operating systems; or

(4) A combination of the aforementioned duties, the performance of which requires the same level of skills. (29 C.F.R. 541.400).

2) AIR TRAFFIC CONTROLLERS AND WEATHER OBSERVERS - NIGHT PAY & SUNDAY PAY: If you work at night as part of a regular tour of duty, you will earn a night differential and receive an additional 10% of basic pay for any hours worked between 6pm and 6am. If you are a full-time employed (40 hours a week) and Sunday is part of your regularly scheduled workweek, you are paid at your rate of basic pay plus a Sunday premium of 25% of your basic rate for each hour of Sunday work which is not overtime (i.e. occasional work on Sunday outside the normal tour of duty is considered overtime work).

HAZARDOUS PAY DIFFERENTIAL: An 8 percent differential is applicable to employees employed in a position that represents a high degree of hazard when working with or in close proximity to ordinance, explosives, and incendiary materials. This includes work such as screening, blending, dying, mixing, and pressing of sensitive ordance, explosives, and pyrotechnic compositions such as lead azide, black powder and photoflash powder. All dry-house activities involving propellants or explosives. Demilitarization, modification, renovation, demolition, and maintenance operations on sensitive ordnance, explosives and incendiary materials. All operations involving regrading and cleaning of artillery ranges.

A 4 percent differential is applicable to employees employed in a position that represents a low degree of hazard when working with, or in close proximity to ordance, (or employees possibly adjacent to) explosives and incendiary materials which involves potential injury such as laceration of hands, face, or arms of the employee engaged in the operation, irritation of the skin, minor burns and the like; minimal damage to immediate or adjacent work area or equipment being used. All operations involving, unloading, storage, and hauling of ordance, explosive, and incendiary ordnance material other than small arms ammunition. These differentials are only applicable to work that has been specifically designated by the agency for ordance, explosives, and incendiary material differential pay.

** UNIFORM ALLOWANCE **

If employees are required to wear uniforms in the performance of this contract (either by the terms of the Government contract, by the employer, by the state or local law, etc.), the cost of furnishing such uniforms and maintaining (by laundering or dry cleaning) such uniforms is an expense that may not be borne by an employee where such cost reduces the hourly rate below that required by the wage determination. The Department of Labor will accept payment in accordance with the following standards as compliance:

The contractor or subcontractor is required to furnish all employees with an adequate number of uniforms without cost or to reimburse employees for the actual cost of the uniforms. In addition, where uniform cleaning and maintenance is made the responsibility of the employee, all contractors and subcontractors subject to this wage determination shall (in the absence of a bona fide collective bargaining agreement providing for a different amount, or the furnishing of contrary affirmative proof as to the actual cost), reimburse all employees for such cleaning and maintenance at a rate of $3.35 per week (or $.67 cents per day). However, in those instances where the uniforms furnished are made of "wash and wear" materials, may be routinely washed and dried with other personal garments, and do not require any special treatment such as dry cleaning, daily washing, or commercial laundering in order to meet the cleanliness or appearance standards set by the terms of the Government contract, by the contractor, by law, or by the nature of the work, there is no requirement that employees be reimbursed for uniform maintenance costs.

The duties of employees under job titles listed are those described in the "Service Contract Act Directory of Occupations", Fifth Edition, April 2006, unless otherwise indicated. Copies of the Directory are available on the Internet. A links to the Directory may be found on the WHD home page at http://www.dol.gov/esa/whd/ or through the Wage Determinations On-Line (WDOL) Web site at http://wdol.gov/.

REQUEST FOR AUTHORIZATION OF ADDITIONAL CLASSIFICATION AND WAGE RATE {Standard Form 1444 (SF 1444)}

Conformance Process:

The contracting officer shall require that any class of service employee which is not listed herein and which is to be employed under the contract (i.e., the work to be performed is not performed by any classification listed in the wage determination), be classified by the contractor so as to provide a reasonable relationship (i.e., appropriate level of skill comparison) between such unlisted classifications and the classifications listed in the wage determination. Such conformed classes of employees shall be paid the monetary wages and furnished the fringe benefits as are determined.

Such conforming process shall be initiated by the contractor prior to the performance of contract work by such unlisted class(es)of employees. The conformed classification, wage rate, and/or fringe benefits shall be retroactive to the commencement date of the contract. {See Section 4.6 (C)(vi)}When multiple wage determinations are included in a contract, a separate SF 1444 should be prepared for each wage determination to which a class(es) is to be conformed.

The process for preparing a conformance request is as follows:

1) When preparing the bid, the contractor identifies the need for a conformed occupation(s) and computes a proposed rate(s).

2) After contract award, the contractor prepares a written report listing in order proposed classification title(s), a Federal grade equivalency (FGE) for each proposed classification(s), job description(s), and rationale for proposed wage rate(s), including information regarding the agreement or disagreement of the authorized representative of the employees involved, or where there is no authorized representative, the employees themselves. This report should be submitted to the contracting officer no later than 30 days after such unlisted class(es) of employees performs any contract work.

3) The contracting officer reviews the proposed action and promptly submits a report of the action, together with the agency's recommendations and pertinent information including the position of the contractor and the employees, to the Wage and Hour Division, Employment Standards Administration, U.S. Department of Labor, for review. (See section 4.6(b)(2) of Regulations 29 CFR Part 4).

4) Within 30 days of receipt, the Wage and Hour Division approves, modifies, or disapproves the action via transmittal to the agency contracting officer, or notifies the contracting officer that additional time will be required to process the request.

5) The contracting officer transmits the Wage and Hour decision to the contractor.

6) The contractor informs the affected employees.

Information required by the Regulations must be submitted on SF 1444 or bond paper.

When preparing a conformance request, the "Service Contract Act Directory of Occupations" (the Directory) should be used to compare job definitions to insure that duties requested are not performed by a classification already listed in the wage determination. Remember, it is not the job title, but the required tasks that determine whether a class is included in an established wage determination. Conformances may not be used to artificially split, combine, or subdivide classifications listed in the wage determination.

AFFIDAVIT re NON-COLLUSION

CITY OF _____)
) ss.
ISLAND OF GUAM)

_____[*state name of affiant signing below*], being first duly sworn, deposes and says that:

1. The name of the offering company or individual is [*state name of company*] _____.

2. The proposal for the solicitation identified above is genuine and not collusive or a sham. The offeror has not colluded, conspired, connived or agreed, directly or indirectly, with any other offeror or person, to put in a sham proposal or to refrain from making an offer. The offeror has not in any manner, directly or indirectly, sought by an agreement or collusion, or communication or conference, with any person to fix the proposal price of offeror or of any other offeror, or to fix any overhead, profit or cost element of said proposal price, or of that of any other offeror, or to secure any advantage against the government of Guam or any other offeror, or to secure any advantage against the government of Guam or any person interested in the proposed contract. All statements in this affidavit and in the proposal are true to the best of the knowledge of the undersigned. This statement is made pursuant to 2 GAR Division 4 § 3126(b).

3. I make this statement on behalf of myself as a representative of the offeror, and on behalf of the offeror's officers, representatives, agents, subcontractors, and employees.

_____
Signature of one of the following:
Offeror, if the offeror is an individual;
Partner, if the offeror is a partnership;
Officer, if the offeror is a corporation.

Subscribed and sworn to before me

this _____ day of _____, 201__.

_____
NOTARY PUBLIC
My commission expires _____, _____.

AG Procurement **Form 003** (Jul. 12, 2010)

AFFIDAVIT DISCLOSING OWNERSHIP and COMMISSION

CITY OF _____)
) ss.
ISLAND OF GUAM)

A. I, the undersigned, being first duly sworn, depose and say that I am an authorized representative of the offeror and that [please check only one]:

[ ] The offeror is an individual or sole proprietor and owns the entire (100%) interest in the offering business.

[ ] The offeror is a corporation, partnership, joint venture, or association known as _____[please state name of offeror company], and the persons, companies, partners, or joint venturers who have held more than 10% of the shares of interest in the offering business during the 365 days immediately preceding the submission date of the proposal are as follows [if none, please so state]

Name	Address	% of Interest

B. Further, I say that the persons who have received or are entitled to receive a commission, gratuity or other compensation for procuring or assisting in obtaining business related to the bid or proposal for which this affidavit is submitted are as follows [if none, please so state]:

Name	Address	Compensation

C. If the ownership of the offering business should change between the time this affidavit is made and the time an award is made or a contract is entered into, then I promise personally to update the disclosure required by 5 GCA §5233 by delivering another affidavit to the government.

_____
Signature of one of the following:
Offeror, if the offeror is an individual;
Partner, if the offeror is a partnership;
Officer, if the offeror is a corporation.

Subscribed and sworn to before me
this ____ day of _____, 201__.

_____
NOTARY PUBLIC
My commission expires_____

AG Procurement **Form 002** (Rev. Nov. 17, 2005)

AFFIDAVIT re CONTINGENT FEES

CITY OF _____)
) ss.
ISLAND OF GUAM)

_____[state name of affiant signing below], being first sworn, deposes and says that:

1. The name of the offering company or individual is [state name of company]

_____

2. As a part of the offering company's bid or proposal, to the best of my knowledge, the offering company has not retained any person or agency on a percentage, commission, or other contingent arrangement to secure this contract. This statement is made pursuant to 2 GAR Division 4 § 11108(f).

3. As a part of the offering company's bid or proposal, to the best of my knowledge, the offering company has not retained a person to solicit or secure a contract with the government of Guam upon an agreement or understanding for a commission, percentage, brokerage, or contingent fee, except for retention of bona fide employees or bona fide established commercial selling agencies for the purpose of securing business. This statement is made pursuant to 2 GAR Division 4 § 11108(f).

4. I make these statements on behalf of myself as a representative of the offeror, and on behalf of the offeror's officers, representatives, agents, subcontractors, and employees.

_____
Signature of one of the following:
Offeror, if the offeror is an individual;
Partner, if the offeror is a partnership;
Officer, if the offeror is a corporation.

Subscribed and sworn to before me
this ____ day of _____, 201__

_____
NOTARY PUBLIC
My commission expires_____

AG Procurement **Form 007** (Jul. 15, 2010)

GOVERNMENT OF GUAM

GENERAL SERVICES AGENCY
148 Route 1, Marine Corp. Drive
Piti, Guam 96915

BID BOND
NO. _____

KNOW ALL MEN BY THESE PRESENTS that _____, as Principal hereinafter called the Principal, and (Bonding Company), _____
A duly admitted insurer under the laws of the Territory of Guam, as Surety, hereinafter called the Surety are Held firmly bound unto the Territory of Guam for the sum of _____
_____ Dollars ($_____), for Payment of which sum will and truly to be made, the said Principal and the said Surety bind ourselves, our heirs, executors, administrators, successors and assigns, jointly and severally, firmly by these presents.

WHEREAS, the Principal has submitted a bid for (identify project by number and brief description)

_____

NOW, THEREFORE, if the Territory of Guam shall accept the bid of the Principal and the Principal shall enter into a Contract with the Territory of Guam in accordance with the terms of such bid, and give such bond or bonds as may be specified in bidding or Contract Documents with good and sufficient surety for the faithful performance of such Contract and for the prompt payment of labor and material furnished in the prosecution thereof, or in the event of the failure of the Principal to enter such Contract and give such bond or bonds, if the Principal shall pay to the Territory of Guam the difference not to exceed the penalty hereof between the amounts specified in said bid and such larger amount for which the Territory of Guam may in good faith contract with another party to perform work covered by said bid or an appropriate liquidated amount as specified in the Invitation for Bids then this obligation shall be null and void, otherwise to remain full force and effect.

Signed and sealed this _____day of _____ 2015

_____
(PRINCIPAL) (SEAL)

_____
(WITNESS)

_____
(TITLE)

_____
(MAJOR OFFICER OF SURETY)

_____
(TITLE)

_____
(MAJOR OFFICER OF SURETY)

_____
(TITLE)

_____
(RESIDENT GENERAL AGENT)

DOA 113/Rev: 4-1-87

INSTRUCTION TO PROVIDERS:

NOTICE to all Insurance and Bonding Institutions:

The Bond requires the signatures of the Vendor, two (2) major Officers of the Surety and Resident General Agent, if the Surety is a foreign or alien surety.

When the form is submitted to General Services Agency, it should be accompanied with copies of The following:

1. Current Certificate of Authority to do business on Guam issued by the Department of Revenue and Taxation.

2. Power of Attorney issued by the Surety to the Resident General Agent.

3. Power of Attorney issued by two (2) major officers of the Surety to whoever is signing on their behalf.

Bonds, submitted as Bid Guarantee, without signatures and supporting documents are invalid and Bids will be rejected.

GOVERNMENT OF GUAM
GENERAL TERMS AND CONDITIONS

SEALED BID SOLICITATION AND AWARD

Only those Boxes checked below are applicable to this bid.

[x] 1. **AUTHORITY:** This solicitation is issued subject to all the provision of the Guam Procurement Act (5GCA, Chapter 5) and the Guam Procurement Regulations (copies of both are available at the Office of the Complier of laws, Department of Law, copies available for inspection at General Services Agency). It requires all parties involved in the Preparation, negotiation, performance, or administration of contracts to act in good faith.

[x] 2. **GENERAL INTENTION**: Unless otherwise specified, it is the declared and acknowledged intention and meaning of these General Terms and conditions for the bidder to provide the Government of Guam (Government) with specified services or with materials, supplies or equipment completely assembled and ready for use.

[x] 3. **TAXES**: Bidders are cautioned that they are subject to Guam Income Taxes as well as all other taxes on Guam Transactions. Specific information on taxes may be obtained from the Director of Revenue and Taxation.

[x] 4. **LICENSING**: Bidders are cautioned that the Government will not consider for award any offer submitted by a bidder who has not complied with the Guam Licensing Law. Specific information on licenses may be obtained from the Director of Revenue and Taxation.

[x] 5. **LOCAL PROCUREMENT PREFERENCE**: All procurement of supplies and services where possible, will be made from among businesses licensed to do business on Guam in accordance with section 5008 of the Guam Procurement Act (5GCA, Chapter 5) and Section 1-104 of the Guam Procurement Regulations.

[x] 6. **COMPLIANCE WITH SPECIFICATIONS AND OTHER SOLICITATION REQUIREMENTS**: Bidders shall comply with all specifications and other requirements of the Solicitation.

[ ] 7. **"ALL OR NONE" BIDS**: NOTE: By checking this item, the Government is requesting all of the bid items to be bided or none at all.

[x] 8. **INDEPENDENT PRICE DETERMINATION**: The bidder, upon signing the Invitation for Bid, certifies that the prices in his bid were derived at without collusion, and acknowledge that collusion and anti-competitive practices are prohibited by law. Violations will be subject to the provision of Section 5651 of that of the Guam Procurement Act. Other existing civil, criminal or administrative remedies are not impaired and may be in addition to the remedies in Section 5651 of the Government code.

[x] 9. **BIDDER'S PRICE**: The Government will consider not more than two (2) (Basic and Alternate) item prices and the bidder shall explain fully each price if supplies, materials, equipment, and/or specified services offered comply with specifications and the products origin. Where basic or alternate bid meets the minimum required specification, cost and other factors will be considered. Failure to explain this requirement will result in rejection of the bid.

[x] 10. **BID ENVELOPE**: Envelope shall be sealed and marked with the bidder's name, Bid number, time, date and place of Bid Opening.

[x] 11. **BID GUARANTEE REQUIREMENT**: Bidder is required to submit a Bid Guarantee Bond or standby irrevocable Letter of Credit or Certified Check or Cashier's Check in the same bid envelope to be held by the Government pending award. The Bid Guarantee Bond, Letter of Credit, Certified Check or Cashier's Check must be issued by any local surety or banking institution licensed to do business on Guam and made payable to the Treasure of Guam in the amount of fifteen percent (15%) of his highest total bid offer. The Bid Bond must be submitted on Government Standard Form BB-1 (copy enclosed). Personal Checks will not be accepted as Bid Guarantee. If a successful Bidder (contractor) withdraws from the bid or fails to enter into contract within the prescribed time, such Bid guarantee will be forfeited to the Government of Guam. Bids will be disqualified if not accompanied by Bid Bond, Letter of Credit, Certified Check or Cashier's check. Bidder must include in his/her bid, valid copies of a Power of Attorney from the Surety and a Certificate of Authority from the Government of Guam to show proof that the surety company named on the bond instrument is authorized by the Government of Guam and qualified to do business on Guam. For detailed information on bonding matters, contact the Department of Revenue and Taxation. Failure to submit a valid Power of Attorney and Certificate of Authority on the surety is cause for rejection of bid. **Pursuant to 5 GCA § 5212, all competitive sealed bidding for the procurement of supplies or services exceeding $25,000.00 a 15% Bid Security of the total bid price must accompany the bid package. The bid bond, Letter of Credit, Certified Check or Cashier's Check will serve as Bid Security for this procurement.**

[x] 12. **PERFORMANCE GUARANTEE**: Bidders who are awarded a contract under this solicitation, guarantee that goods will be delivered or required services performed within the time specified. Failure to perform the contract in a satisfactory manner may be cause for suspension or debarment from doing business with the Government of Guam. In addition, the Government will hold the Vendor liable and will enforce the requirements as set forth in Section 40 of these General Terms and Conditions.

[x] 13. **SURETY BONDS**: Bid and Bid Bonds coverage must be signed or countersigned in Guam by a foreign or alien surety's resident general agent. The surety must be an Insurance Company, authorized by the government of Guam and qualified to do business in Guam. Bids will be disqualified if the Surety Company does not have a valid Certificate of Authority from the Government of Guam to conduct business in Guam.

[x] 14. **COMPETENCY OF BIDDERS**: Bids will be considered only from the such bidders who, in the opinion of the Government, can show evidence of their ability, experience, equipment, and facilities to render satisfactory service.

[x] 15. **DETERMINATION OF RESPONSIBILITY OF BIDDERS**: The Chief Procurement Officer reserves the right for securing from bidders information to determine whether or not they are responsible and to inspect plant site, place of business; and supplies and services as necessary to determine their responsibility in accordance with Section 15 of these General Terms and Conditions.
(2 GAR, Div. 4 § 3116)

[x] 16. **STANDARD FOR DETERMINATION OF LOWEST RESPONSIBLE BIDDER**:
In determining the lowest responsible offer, the Chief Procurement Officer shall be guided by the following:

a) Price of items offered.
b) The ability, capacity, and skill of the Bidder to perform.
c) Whether the Bidder can perform promptly or within the specified time.
d) The quality of performance of the Bidder with regards to awards previously made to him.
e) The previous and existing compliance by the Bidder with laws and regulations relative to procurement.
f) The sufficiency of the financial resources and ability of the Bidder to perform.
g) The ability of the bidder to provide future maintenance and services for the subject of the award.
h) The compliance with all of the conditions to the Solicitation.

[x] 17. **TIE BIDS**: If the bids are for the same unit price or total amount in the whole or in part, the Chief Procurement Officer will determine award based on 2 GAR, Div. 4, § 3109(o) (2) or to reject all such bids.

[x] 18. **BRAND NAMES**: Any reference in the Solicitation to manufacturer's Brand Names and number is due to lack of a satisfactory specification of commodity description. Such preference is intended to be descriptive, but not restrictive and for the sole purpose of indicating prospective bidders a description of the article or services that will be satisfactory. Bids on comparable items will be considered provided the bidder clearly states in his bid the exact articles he is offering and how it differs from the original specification.

[x] 19. **DESCRIPTIVE LITERATURE**: Descriptive literature(s) as specified in this solicitation must be furnished as a part of the bid and must be received at the date and time set for opening Bids. The literature furnished must clearly identify the item(s) in the Bid. The descriptive literature is required to establish, for the purpose of evaluation and award, details of the product(s) the bidder proposes to furnish including design, materials, components, performance characteristics, methods of manufacture, construction, assembly or other characteristics which are considered appropriate. Rejection of the Bid will be required if the descriptive literature(s) do not show that the product(s) offered conform(s) to the specifications and other requirements of this solicitation. Failure to furnish the descriptive literature(s) by the time specified in the Solicitation will require rejection of the bid.

[ ] 20. **SAMPLES**: Sample(s) of item(s) as specified in this solicitation must be furnished as a part of the bid and must be received at the date and time set for opening Bids. The sample(s) should represent exactly what the bidder proposes to furnish and will be used to determine if the item(s) offered complies with the specifications. Rejection of the Bid will be required if the sample(s) do not show that the product(s) offered conform(s) to the specifications and other requirements of this solicitation. Failure to furnish the sample(s) by the time specified in the Solicitation will require rejection of the Bid.

[ ] 21. **LABORATORY TEST**: Successful bidder is required to accompany delivery of his goods with a Laboratory Test Report indicating that the product he is furnishing the Government meets with the specifications. This report is on the bidder's account and must be from a certified Testing Association.

[x] 22. **AWARD, CANCELLATION, & REJECTION**: Award shall be made to the lowest responsible and responsive bidder, whose bid is determined to be the most advantageous to the Government, taking into consideration the evaluation factors set forth in this solicitation. No other factors or criteria shall be used in the evaluation. The right is reserved as the interest of the Government may require to waive any minor irregularity in bid received. The Chief Procurement Officer shall have the authority to award, cancel, or reject bids, in whole or in part for any one or more items if he determines it is in the public interest. Award issued to the lowest responsible bidder within the specified time for acceptance as indicated in the solicitation, results in a bidding contract without further action by either party. In case of an error in the extension of prices, unit price will govern. It is the policy of the Government to award contracts to qualified local bidders. The Government reserves the right to increase or decrease the quantity of the items for award and make additional awards for the same type items and the vendor agrees to such modifications and additional awards based on the bid prices for a period of thirty (30) days after original award. No. award shall be made under this solicitation which shall require advance payment or irrevocable letter of credit from the government (2 GAR, Div.4 §1103).

[ ] 23. **MARKING:** Each outside container shall be marked with the Purchase Order number, item number, brief item description and quantity. Letter marking shall not be less than 3/4" in height.

[x] 24. **SCHEDULE FOR DELIVERY**: Successful bidder shall notify the General Services Agency, Telephone Nos. 475-1707 or 475-713, at least twenty-four (24) hours before delivery of any item under this solicitation.

[ ] 25. **BILL OF SALE**: Successful supplier shall render Bills of Sale for each item delivered under this contract. Failure to comply with this requirement will result in rejection of delivery. The Bill of Sale must accompany the items delivered but will not be considered as an invoice for payment. Supplier shall bill the Government in accordance with billing instructions as indicated on the Purchase Order.

[ ] 26. **MANUFACTURER'S CERTIFICATE**: Successful bidder is required, upon delivery of any item under this contract, to furnish a certificate from the manufacturer indication that the goods meet the specifications. Failure to comply with this request will result in rejection of delivery payment. Supplier shall bill the Government in accordance with billing instructions as indicated on the Purchase Order.

[x] 27. **INSPECTION**: All supplies, materials, equipment, or services delivered under this contract shall be subject to the inspection and/or test conducted by the Government at destination. If in any case the supplies, materials, equipment, or services are found to be defective in material, workmanship, performance, or otherwise do not conform with the specifications, the Government shall have the right to reject the items or require that they be corrected. The number of days required for correction will be determined by the Government.

[ ] 28. **MOTOR VEHICLE SAFETY REQUIREMENTS**: The Government will only consider Bids on motor vehicles which comply with the requirements of the National Traffic and Motor Vehicle safety Act of 1966 (Public Law 89-563) and Clean Air Act as amended (Public Law 88-206), that are applicable to Guam. Bidders shall state if the equipment offered comply with these aforementioned Federal Laws.

[ ] 29. **SAFETY INSPECTION**: All motor vehicles delivered under this contract must pass the Government of Guam Vehicle Inspection before delivery at destination.

[ ] 30. **GUARANTEE**:

a) Guarantee of Vehicle Type of Equipment:
The successful bidder shall guarantee vehicular type of equipment offered against defective parts, workmanship, and performance, for a period of not less than one (1) year after date of receipt of equipment. Bidder shall also provide service to the equipment for at least one (1) year. Service to be provided shall include, but will not be limited to tune ups (change of spark plugs, contact points and condensers) and lubrication (change of engine and transmission oil). All parts and labor shall be at the expense of the bidder. All parts found defective and not caused by misuse, negligence or accident within the guarantee period shall be repaired, replaced, or adjusted within six (6) working days after notice from the Government and without cost to the Government. Vehicular type of equipment as used in this context shall include equipment used for transportation as differentiated from tractors, backhoes, etc.

b) Guarantee of Other Type of Equipment:
The successful bidder shall guarantee all other types of equipment offered, except those mentioned in 30a, above, against defective parts, workmanship, and performance for a period of not less than three (3) months after date of receipt of equipment. Bidder shall also provide service to the equipment for at least three (3) months. All parts found defective within that period shall be repaired or replaced by the Contractor without cost to the Government. Repairs, adjustments or replacements of defective parts shall be completed by the contractor within six (6) working days after notice from the Government.

(c) Compliance with this Section is a condition of this Bid.

[x] 31. **REPRESENTATION REGARDING ETHICS IN PUBLIC PROCUREMENT**: The bidder or contractor represents that it has not knowingly influenced and promises that it will not knowingly influence a Government employee to breach any of the ethical standards and represents that it has not violated, is not violating, and promises that it will not violate the prohibition against gratuities and kickbacks set forth on Chapter 11 (Ethics in Public Contracting) of the Guam Procurement Act and in Chapter 11 of the Guam Procurement Regulations.

[x] 32. **REPRESENTATION REGARDING CONTINGENT FEES**: The contractor represents that it has not retained a person to solicit or secure a Government contract upon an agreement or understanding for a commission, percentage, brokerage, or contingent fee, except for retention of bona fide employees or bona fide established commercial selling agencies for the purpose of securing business (GPR Section 11-207).

[x] 33. **EQUAL EMPLOYMENT OPPORTUNITY**: Contractors shall not discriminate against any employee or applicant of employment because of race, color, religion, sex, or national origin. The contractor will take affirmative action to ensure that employees are treated equally during employment without regards to their race, color, religion, sex, or national origin.

[x] 34. **COMPLIANCE WITH LAWS**: Bidders awarded a contract under this Solicitation shall comply with the applicable standard, provisions, and stipulations of all pertinent Federal and/or local laws, rules, and regulations relative to the performance of this contract and the furnishing of goods.

[ ] 35. **CHANGE ORDER**: Any order issued relative to awards made under this solicitation will be subject to and in accordance with the provisions of Section 6-101-03.1 of the Guam Procurement Regulations.

[x] 36. **STOP WORK ORDER**: Any stop work order issued relative to awards made under this solicitation will be subject to and in accordance with the provisions of Section 6-101-04.1 of the Guam Procurement Regulations.

[x] 37. **CANCELLATION OF INVITATION FOR BIDS OR REQUEST FOR PROPOSALS**: Any Invitation for Bid may be cancelled, or any or all bids or proposals may be rejected in whole or in part as may be specified in the solicitation, when it is in the best interests of the Territory in accordance with regulations promulgated by the Policy Office. The reasons therefor shall be made part of the contract file.

[x] 38. **TIME FOR COMPLETION**: It is hereby understood and mutually agreed by and between the contractor and the Government that the time for delivery to final destination or the timely performance of certain services is an essential condition of this contract. If the contractor refuses or fails to perform any of the provisions of this contract within the time specified in the Purchase Order (from the date Purchase Order is acknowledged by vendor), then the contractor is in default. Defaults will be treated subject to and in accordance with the provisions of 2 GAR, Div. 4 § 6101(8)

[x] 39. **JUSTIFICATION OF DELAY**: Bidders who are awarded contracts under this Solicitation, guarantee that the goods will be delivered to their destination or required services rendered within the time specified. If the bidder is not able to meet the specified delivery date, he is required to notify the Chief Procurement Officer of such delay. Notification shall be in writing and shall be receive by the Chief Procurement Officer at least twenty-four (24) hours before the specified delivery date. Notification of delay shall include an explanation of the causes and reasons for the delay including statement(s) from supplier or shipping company causing the delay. The Government reserves the right to reject delay justification if, in the opinion of the Chief Procurement Officer, such justification is not adequate.

[ ] 40. **SERVICE-DISABLED VETERAN OWNED BUSINESS PREFERENCE**: Bidding is subject to the policy in favor of Service-Disabled Veteran Owned Business as defined in 5 GCA sections 5011 and 5012.

[x] 41. **LIQUIDATED DAMAGES**: When the contractor is given notice of delay or nonperformance as specified in Paragraph 1 (Default) of the Termination for Default Clause of this contract and fails to cure in the time specified, the contractor shall be liable for damages for delay in the amount of one-fourth of one percent (1%) of outstanding order per calendar day from date set for cure until either the territory reasonable obtains similar supplies or services if the contractor is terminated for default, or until the contractor provides the supplies or services if the contractor is not terminated for default. To the extent that the contractor's delay or nonperformance is excused under Paragraph 40 (Excuse for Nonperformance or Delayed Performance) of the Termination for Default Clause of this contract, liquidated damages shall not be due the territory. The contractor remains liable for damages caused other than by delay. **2 GAR, Div. 4 §6101(d).**

[x] 42. **PHYSICAL LIABILITY**: If it becomes necessary for the Vendor, either as principal, agent or employee, to enter upon the premises or property of the Government of Guam in order to construct, erect, inspect, make delivery or remove property hereunder, the Vendor hereby covenants and agrees to take, use, provide and make all proper, necessary and sufficient precautions, safeguards and protections against the occurrence of any accidents, injuries or damages to any person or property during the progress of the work herein covered, and to be responsible for, and to indemnify and save harmless the Government of Guam from the payment of all sums of money by reason of all or any such accidents, injuries or damages that may occur upon or about such work, and fines, penalties and loss incurred for or by reasons of the violations of any territorial ordinance, regulations, or the laws of Guam or the United States, while the work is in progress. Contractor will carry insurance to indemnify the Government of Guam against any claim for loss, damage or injury to property or persons arising out of the performance of the Contractor or his employees and agents of the services covered by the contract and the use, misuse or failure of any equipment used by the contractor or his employees or agents,
and shall provide certificates of such insurance to the Government of Guam when required.

[ ] 43. Contract will be cancelled if funds not appropriated or insufficient, and that government will timely inform contractor. 2 GAR, Div.4 §3121(e) (1) (C) and 2 GAR, Div.4 § 3121(e)(1)(D).

[ ] 44. If cancelled, contractor will be reimbursed unamortized reasonably incurred non-recurring costs. 2 GAR, Div.4 § 3121(e) (1) (G).

[x] 45. **CONTACT FOR CONTRACT ADMINISTRATION**: If your firm receives a contract as a result of this Solicitation, please designate a person whom we may contact for prompt administration.

Name: _____ Title: _____

Address: _____ Telephone: _____

_____

_____

G.S.A. Form 112 Revised 8/12

GOVERNMENT OF GUAM

SEALED BID SOLICITAITON INSTRUCTIONS

1. BID FORMS: Each bidder shall be provided with two (2) sets of Solicitation forms. Additional copies may be provided upon request. Bidders requesting additional copies of said forms will be charged per page in accordance with 5 GCA § 10203 of the Government Code of Guam. All payments for this purpose shall be by cash, certified check or money order and shall be made payable to the General Services Agency (EO 86-24).

2. PREPARATIONS OF BIDS:
   a) Bidders are required to examine the drawings, specifications, schedule, and all instructions. Failure to do so will be at bidder's risk.

   b) Each bidder shall furnish the information required by the Solicitation. The bidder shall sign the solicitation and print or type his name on the Schedule. Erasures or other changes must be initialed by the person signing the bid. Bids signed by an agent are to be accompanied by evidence of this authority unless such evidence has been previously furnished to the issuing office.

   c) Unit price for each unit offered shall be shown and such price shall include packing unless otherwise specified. A total shall be entered in the amount column of the Schedule for each item offered. In case of discrepancies between a unit price and extended price, the unit price will be presumed to be correct.

   d) Bids for supplies or services other than those specified will not be considered. Time, if stated as a number of days, means calendar days and will include Saturdays, Sundays, and holidays beginning the day after the issuance of a Notice to Proceed. Time stated ending on a Saturday, Sunday or Government of Guam legal holiday will end at the close of the next business day.

3. EXPLANATION TO BIDDERS: Any explanation desired by a bidder regarding the meaning or interpretation of the Solicitation, drawings, specifications, etc., must be submitted in writing and with sufficient time allowed for a written reply to reach all bidders before the submission of their bids. Oral explanations or instructions given before the award of the contract will not be binding. Any information given to a prospective bidder concerning a Solicitation will be furnished to all prospective bidders in writing as an amendment to the Solicitation if such information would be prejudicial to informed bidders.

4. ACKNOWLEDGEMENT OF AMENDMENTS TO SOLICITATIONS: Receipt of an amendment to a Solicitation by a bidder must be acknowledged by signing an acknowledgement of receipt of the amendment. Such acknowledgement must be received prior to the hour and date specified for receipt of bids.

5. SUBMISSION OF BIDS:
   a) Bids and modifications thereof shall be enclosed in sealed envelopes and addressed to the office specified in the Solicitation. The bidder shall show the hour and date specified in the Solicitation for receipt, the Solicitation number, and the name and address of the bidder on the face of the envelope.

   b) Telegraphic bids will not be considered unless authorized by the Solicitation. However, bids may be modified or withdrawn by written or telegraphic notice, provided such notice is received prior to the hour and date specified for receipt (see paragraph 6 of these instructions).

   c) Samples of items, when required, must be submitted within the time specified, unless otherwise specified by the Government, at no expense to the Government. If not destroyed by testing, samples will be returned at bidder's request and expense, unless otherwise specified by the Solicitation.

   d) Samples or descriptive literature should not be submitted unless it is required on this solicitation. Regardless of any Attempt by a bidder to condition the bid, unsolicited samples or descriptive literature will not be examined or tested at the bidder's risk, and will not be deemed to vary any of the provisions of this Solicitation.

6. FAILURE TO SUBMIT BID: If no bid is to be submitted, do not return the solicitation unless otherwise specified. A letter or postcard shall be sent to the issuing office advising whether future Solicitations for the type of supplies or services covered by this Solicitation are desired.

7. LATE BID, LATE WITHDRAWALS, AND LATE MODIFICATIONS:

   a) Definition: Any bid received after the time and date set for receipt of bids is late. Any withdrawal or modification of a bid received after the time and date set for opening of bids at the place designated for opening is late (Guam Procurement Regulations 2 GAR, Div.4 §3109(k)).

   b) Treatment: No late bid, late modification, or late withdrawal will be considered unless received before contract award, and the bid, modification, or withdrawal would have been timely but for the action or inaction of territorial personnel directly serving the procurement activity.

8. **DISCOUNTS**:

a) Notwithstanding the fact that prompt payment discounts may be offered, such offer will not be considered in evaluating bids for award unless otherwise specified in the Solicitation. However, offered discounts will be taken if payment is made within the discount period, even though not considered in the evaluation of bids.

b) In connection with any discount offered, time will be computed from date of delivery and acceptance of the supplies to the destination as indicated in the purchase order or contract. Payment is deemed to be made for the purpose of earning the discount on the date of mailing of the Government check.

9. **GOVERNMENT FURNISHED PROPERTY:** No material, labor or facilities will be furnished by the Government unless otherwise provided for in the Solicitation.

10. **SELLER' INVOICES**: Invoices shall be prepared and submitted in quadruplicate (one copy shall be marked "original") unless otherwise specified. Invoices shall be "certified true and correct" and shall contain the following information: Contract and order number (if any), item numbers, description of supplies or services, sizes, quantities, unit prices, and extended total. Bill of lading number and weight of shipment will be shown for shipments made on Government bills of lading.

11. **RECEIPT, OPENING AND RECORDING OF BIDS**: Bids and modifications shall be publicly opened in the presence of one or more witnesses, at the time, date, and place designated in the Invitation for Bids. The name of each bidder, the bid price, and such other information as is deemed appropriate by the Procurement Officer, shall be read aloud and recorded, or otherwise made available. The names and addresses of required witnesses shall be recorded at the opening. The opened bids shall be available for public inspection except to the extent the bidder designates trade secrets or other proprietary data to be confidential as set forth in accordance with Section 12, below. Material so designated shall accompany the bid and shall be readily separable from the bid in order to facilitate public inspection of the non-confidential portion of the bid. Prices, makes and models or catalogue numbers of the items offered, deliveries, and terms of payment shall be publicly available at the time of bid opening regardless of any designation to the contrary (Guam Procurement Regulations 2 GAR, Div.4 §3109(k)).

12. **CONFIDENTIAL DATA**: If a bidder considers any information submitted in its bid to be confidential, the bidder must identify in writing to the Government those portions which it considers confidential, and must request in writing that those portions be kept confidential. Only trade secrets and proprietary data will be considered confidential. If there is a request for confidentiality, the Government will render a decision on the request as soon as practicable after bids are opened. The Government will advise any bidder requesting confidentiality, of the Government's decision in writing. If the Government does not agree with a bidder's request, then the Government will inform the bidder that it may lodge a protest regarding any part of the Government's decision by following the procedure for protests outlined in Chapter 9 of the Guam Procurement Regulations.

13. **PROHIBITION AGAINST GRATUITIES AND KICKBACKS:** With respect to this procurement and any other contract that bidder may have or wish to enter into with the Government, the bidder represents that he/she has not violated, is not violating, and promises that he will not violate the prohibition against gratuities and kickbacks set forth in the Guam Procurement Regulations.

14. **STATEMENT OF QUALIFICATIONS:** The ability capacity and skill of the Bidders to perform; Whether the bidder can perform promptly or within the specified time; The quality of performance of the Bidder with regards to awards previously made to him; The sufficiency of the financial resources and ability of the bidders to perform; And the compliance with all of the conditions to the solicitation.

15. **WAGE AND BENEFIT COMPLIANCE-CONTRACTORS PROVIDING SERVICES**
(a) Contractor with regard to all person its employs whose purpose in whole or in part is the direct delivery of services contracted for with the Government of Guam in this procurement, shall pay such employees in accordance with the Wage Determination for Guam and the Northern Marianas Islands issued and promulgated by the U.S. Department of Labor for such labor as is employed in the direct deliverance of deliverables to the government of Guam. 5 GCA § 5801 Contractor shall be responsible for flowing down this obligation to its subcontractors.

(b) The Wage Determination most recently issued by the U.S. Department of Labor at the time this Agreement was awarded to Contractor shall be used to determine wages and benefits which shall be paid to employees pursuant to this clause. 5 GCA § 5801

(c) Should any contract contain a renewal clause, then at the time of renewal adjustments there shall be stipulations contained in that contract for applying the Wage Determination, so that the Wage Determination promulgated by the U.S Department of Labor on a date most recent to the renewal date shall apply. 5 GCA § 5801

(d) In addition to the Wage Determination detailed above, health and similar benefits for employees having a minimum value as detailed in the Wage Determination issued and promulgated by the U.S. Department of Labor shall apply. Contractor shall pay a minimum of ten (10) paid holidays per annum per employee. 5 GCA § 5802

Any violation of Contractor or its subcontractors obligations of this section shall be investigated by the Guam Department of Labor and may include a monetary penalty assessment by the Guam Department of Labor of no less than One Hundred Dollars ($100.00) per day, and no more than One Thousand Dollars ($1,000.00) per day, until such time as a violation has been corrected, as well as the payment of all back wages and benefits due. 5 GCA § 5803

(f) In addition to any and all other breach of contract actions the Government of Guam may have under this procurement, in the event there is a violation in the process set forth in subsection (e) above, Contractor may be placed on probationary status by the Chief Procurement Officer of the General Service Agency, or its successor, for a period of one (1) year.

During the probationary status, a Contractor shall not be awarded any contract by any instrumentality of the Government of Guam. A Contractor who has been placed on probationary status, or has been assessed a monetary penalty pursuant to 5 G.C.A. Article 13 Title 5 may appeal such penalty or probationary status to the Superior Court of Guam. 5 GCA § 5804

(g) Contractor along with all proposed offerors and submitter under this procurement were required to submit a Declaration of Compliance with Wage Determination laws as part of this procurement with a copy of the most recent Wage Determination for Guam and the Northern Marianas Islands issued and promulgated by the U.S. Department of Labor. 5 GCA §5805

(h) The applicable USDOL Wage Determination Rate Revision (as defined by subsections (b) and (c)) is to this Agreement. Contractor agrees to provide upon written request by the Government of Guam written certification of its compliance with its obligations as part of each invoice, along with the names of any employees, their positions, and detailed wage and benefits paid in keeping with this section. Additionally upon request by Government of Guam the Contractor shall submit source documents as to those individuals provide direct services in part or whole under this Agreement and its payments to them of such wages and benefits.

16. **Ethical Standards:**
With respect to this procurement and any other contract that the Contractor may have, or wish to enter into, with any government of Guam agency, the Contractor represents that it has not knowingly influenced, and promises that it will not knowingly influence, any government employee to breach any of the ethical standards set forth in the Guam Procurement Law and in any of the Guam Procurement Regulations.

17. **Prohibition against Contingent Fees:**
The Contractor represents that he has not retained any person or agency upon an agreement or understanding for a percentage, commission, brokerage, or other contingent arrangement, except for retention of bona fide employees or bona fide established commercial selling agencies, to solicit or secure this Agreement or any other contract with the government of Guam or its agencies.

18. **Contractor's Warranty as to Employees and Sex Offenses.** ***Reference 5 GCA 5253 (b)***
Contractor warrants that no person providing services on behalf of the Contractor has been convicted of a sex offense under the provisions of Chapter 25 of Title 9 of GCA or an offense as defined in Article 2 of Chapter 28, Title 9 GCA, or an offense in another jurisdiction with, at a minimum, the same elements as such offenses, or who is listed on the Sex Offender Registry.

Contractor warrants that if any person providing services on behalf of Contractor is convicted of a sex offense under the provisions of Chapter 25 of Title 9 GCA, or an offense as defined in Article 2 of Chapter 28, Title 9 GCA, or an offense in another jurisdiction with, at a minimum, the same elements as such offenses, or who is listed on the Sex Offender Registry, that such person will be immediately removed from working at said agency and that the administrator of said agency be informed of such within twenty-four (24) hours of such conviction. Any contactor found in violation of this section, after notice from the Government of Guam, after notice from the contracting authority of such violation, shall within twenty-four (24) hours, take corrective action and shall report such action to the contracting authority. Failure to take corrective action with the stipulated period may result in the temporary suspension of the contract at the discretion of the Government of Guam.

19. **Policy in Favor of Service-Disabled Veteran Owned Businesses**
P.L. 31-115 (September 20, 2011) 5 GCA § 5011 and § 5012 In the procurement of any supply or service, (except for professional services), if such supply or service is offered by a Service-Disabled Veteran Owned Business "SDVOB", as defined in 5 GCA § 5012, that is at least fifty one percent (51%) owned by service-disabled veteran(s), and if the supply or service is available within the period that is required for the procurement, and the price for the supply or service does not exceed one hundred five percent (105%) of the lowest bidder price, a preference shall be given to that SDVOB by the Government of Guam, and the supply or service shall be purchased from said SDVOB. This shall be in addition to any other procurement benefit the SDVOB may qualify for under Guam law. A business concern is a qualified SDVOB if: (a) the business concern is licensed to do business on Guam; (b) the business concern maintains its headquarters on Guam; (c) the business concern is at least fifty-one (51%) owned by a service-disabled veteran(s) who served in the active U.S. military service, was discharged or released under honorable conditions and whose disability is service-connected as demonstrated by a DD214, and certified by an award letter from the U.S. Department of Veterans Affairs; the DD214 and Disability award letter from U.S. Department of Veterans Affairs are submitted to the Government of Guam procuring agency for every service offered; and the service disabled veteran(s) owner(s) of the business concern has filed individual tax returns on Guam for a period of at least three (3) consecutive years.

Item No.	Description	Qty	Unit	Unit Price	Price Extension
1.1	**500 Fathom FAD Systems Sets As per the following specifications**	**1**	**Lots**	**$_____**	**$_____**

500 Fathom system Set comprised of the following components three (3) each set

All sets are to be assembled as instructed in the attached FAD Assembly instructions for 500 and 1000 Fathom sets.

All individual components must meet or exceed attached specifications for each item.

SPECIFICATIONS:	**BIDDING ON / REMARKS:**
1- 3/8" Safety Shackle (1 each)	_____
1-1/4" Safety Shackle (1 each)	_____
7/8" Eye to Eye Swivel (1 each)	_____
3/4" Safety Shackle (5 each)	_____
3/4" Eye to Eye Swivel (3 each)	_____
3/4" Nylite Thimble (1 each)	_____
7/8" Nylite Thimble (1 each)	_____
3/4" 100' Open Link Chain (1 each)	_____
3/4" 50' Open Link Chain (1 each)	_____
3/4" 1800' 12 Strand Plaited Nylon Line (1 each)	_____
7/8" 3000' 12 Strand Plaited Polyproplylene line (1 each)	_____
60" New Spherical 3/16" Steel Mooring Buoy with Pad Eyes and Light Mast Primer Painted	_____
2 Mile Range, Amber 15FPM, (Flashes per minute) Navigational Light with Bracket	_____

Item No.	Description	Qty	Unit	Unit Price	Price Extension
2.1	**1000 Fathom FAD System Set As per the following specifications**	**1**	**Lot**	**$_____**	**$_____**

1000 Fathom system Set comprised of the following components one (2) each set

All sets are to be assembled as instructed in the attached FAD Assembly instructions for 500 and 1000 Fathom sets.

All individual components must meet or exceed attached specifications for each item.

SPECIFICATIONS:	**BIDDING ON / REMARKS:**
1-3/8" Safety Shackle (1 each)	_____
1-1/4" Safety Shackle (1 each)	_____
7/8" Eye to Eye Swivel (1 each)	_____
3/4" Safety Shackle (5 each)	_____
3/4" Eye to Eye Swivel (3 each)	_____
3/4" Nylite Thimble (1 each)	_____
7/8" Nylite Thimble (1 each)	_____
3/4" 100' Open Link Chain (1 each)	_____
3/4" 50' Open Link Chain (1 each)	_____
3/4" 1800' 12 Strand Plaited Nylon Line (1 each)	_____
7/8" 6000' 12 Strand Plaited Polyproplylene Line (1 each)	_____
60" New Spherical 3/16" Steel Mooring Buoy with Pad Eyes and Light Mast Primer Painted	_____
2 Mile Range, Amber 15FPM, (Flashes per minute) Navigational Light with Bracket	_____

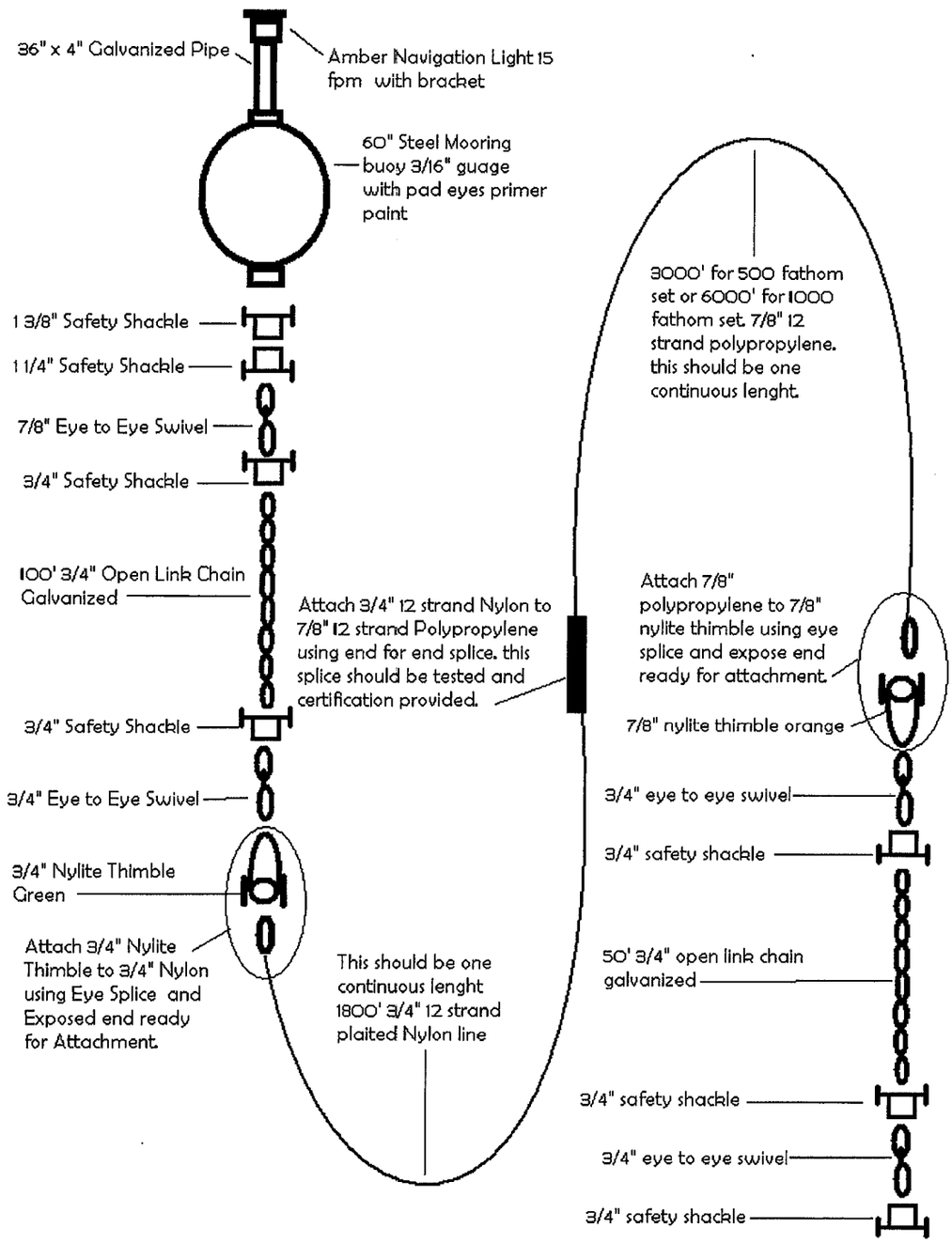
36" x 4" Galvanized Pipe
Amber Navigation Light 15 fpm with bracket
60" Steel Mooring buoy 3/16" guage with pad eyes primer paint
1 3/8" Safety Shackle
1 1/4" Safety Shackle
7/8" Eye to Eye Swivel
3/4" Safety Shackle
100' 3/4" Open Link Chain Galvanized
Attach 3/4" 12 strand Nylon to 7/8" 12 strand Polypropylene using end for end splice. this splice should be tested and certification provided.
3/4" Safety Shackle
3/4" Eye to Eye Swivel
3/4" Nylite Thimble Green
Attach 3/4" Nylite Thimble to 3/4" Nylon using Eye Splice and Exposed end ready for Attachment.
This should be one continuous lenght 1800' 3/4" 12 strand plaited Nylon line
3000' for 500 fathom set or 6000' for 1000 fathom set. 7/8" 12 strand polypropylene. this should be one continuous lenght.
Attach 7/8" polypropylene to 7/8" nylite thimble using eye splice and expose end ready for attachment.
7/8" nylite thimble orange
3/4" eye to eye swivel
3/4" safety shackle
50' 3/4" open link chain galvanized
3/4" safety shackle
3/4" eye to eye swivel
3/4" safety shackle

4

Fish Aggregating Device System

Please see attached specification sheets for each item listed below.

500 Fathom System Set:

1. 1 3/8" Safety Shackle 1ea.
2. 1 ¼" Safety Shackle 1ea.
3. 7/8" Eye to Eye Swivel 1ea.
4. ¾" Safety Shackle 5ea.
5. ¾" Eye to Eye Swivel 3ea.
6. ¾" Nylite Thimble 1ea.
7. 7/8" Nylite Thimble 1ea.
8. ¾" 100' Open Link Chain 1ea.
9. ¾" 50' Open Link Chain 1ea.
10. ¾" 1800' 12 Strand Plaited Nylon Line
11. 7/8" 3000' 12 Strand Plaited Polypropylene Line
12. 60" New Spherical 3/16" steel mooring buoy with pad eyes and light mast primer paint 1ea.
13. 2 mile range amber 15 fpm navigation light with bracket 1ea.

1000 Fathom System Set:

1. 1 3/8" Safety Shackle 1ea.
2. 1 ¼" Safety Shackle 1ea.
3. 7/8" Eye to Eye Swivel 1ea.
4. ¾" Safety Shackle 5ea.
5. ¾" Eye to Eye Swivel 3ea.
6. ¾" Nylite Thimble 1ea.
7. 7/8" Nylite Thimble 1ea.
8. ¾" 100' Open Link Chain 1ea.
9. ¾" 50' Open Link Chain 1ea.
10. ¾" 1800' 12 Strand Plaited Nylon Line
11. 7/8" 6000' 12 Strand Plaited Polypropylene Line
12. 60" New Spherical 3/16" steel mooring buoy with pad eyes and light mast primer paint 1ea.
13. 2 mile range amber 15 fpm navigation light with bracket 1ea.

Packing and Material Instruction:

1. Nylon to be bailed out first, Nylon on top, Polypropylene on bottom.
2. Both ends with Nylite Thimbles exposed.
3. Boxed packing method preferred over spooled.
4. Lights should be packed separately for shipping and not installed.

5. All Galvanized hardware will be used
6. All line and splicing should be tested with certification.
7. Light bracket should be designed to accommodate gas release located at bottom of light unit.

Specification Sheet: Safety Shackles

Item Number 1: 1 3/8" Safety Shackle

Item Number 2: 1 ¼" Safety Shackle

Item Number 4: ¾" Safety Shackle

- Working Load Limit permanently shown on every shackle.
- Forged – Quenched and Tempered, with alloy pins.
- Hot Dip galvanized or Self Colored.
- Fatigue rated (1/3t - 55t).
- Meets or exceeds all requirements of ASME B30.26.
- Serialized Pin and Bow • Magnetic Particle Inspected
- Proof of impact testing.
- Meet the additional requirements of DNV rules for certification
- Meets the performance requirements of Federal specification RR-C-271F Type IVA, Grade A, Class 3.

Nominal Size (in.)	Working Load Limit (t)*	Weight Each (lbs.)	Dimensions (in.								
			A	B	C	D	E	F	H	L	N
1-3/8	13-1/2	15.83	2.25	1.53	5.25	1.42	3.63	3.31	9.16	6.38	1.50
1-1/4	12	11.71	2.03	1.40	4.69	1.29	3.25	3.00	8.25	5.75	1.38
3/4	4-3/4	2.72	1.25	.89	2.81	.75	2.00	1.81	4.97	3.50	.81

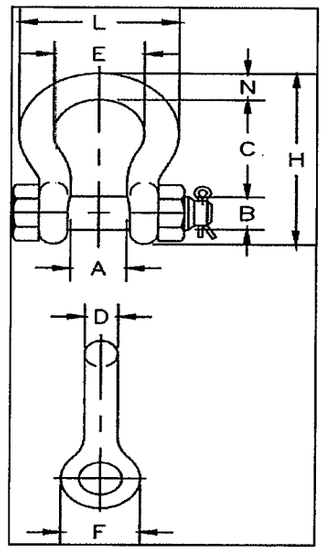

Specification Sheet: Eye To Eye Swivels

Item Number 3: 7/8" Eye To Eye Swivel

Item Number 5: ¾" Eye to Eye Swivel

- Hot dip Galvanized
- Quenched & Tempered
- Meet or exceed all requirements of ASME B30.26 including identification, design factor and proof load
- Meet the additional requirements of DNV rules for certification
- Meets the performance requirements of Federal specification RR-C-271F Type VII, Grade A, Class 2.

Nominal Size (in.)	Working Load Limit (t)*	Weight Each (lbs.)	Dimensions (in.							
			A	B	C	D	J	M	R	S
3/4	7200	4.02	3.50	1.75	2.00	2.63	1.88	.88	7.19	4.31
7/8	10000	6.25	4.00	2.06	2.25	3.06	2.13	1.00	8.38	5.00

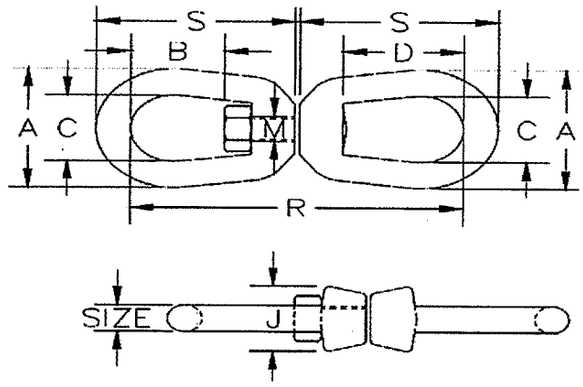

Specification Sheet: Nylite Thimbles

Item Number 6: ¾" Nylite Thimble

Item Number 7: 7/8" Nylite Thimble

• Working Load in tons (2000 lbs.)

Size Daimeter	Size Circ.	SRT Minimum Eye size	Working Load Tons	Weight Each (Lbs.)	Sheild Color
(1) 3/4"-13/16"	2-1/4"-2-1/2"	3-3/4"	2.5 tn	1.6 lbs.	Green
(2) 7/8"-1-1/16"	2-3/4"-3-1/4"	4-7/8"	4.5 tn	3.7 lbs.	Orange

Spool/Sheave Inside Dia.	Spool Sheave Outside Dia.	Pin* Dia.
(1) .64"	N/A	.63"
(2) .89"	N/A	.88"

Specification Sheet: Mooring Chain

Item Number 8: ¾" 100' Open Link Chain

Item Number 9: ¾" 50' Open Link Chain

- Hot Dip galvanized or Self Colored.
- Low-carbon steel chain
- Made with a longer link design for mooring applications
- Longer link allows the use of a shackle anywhere in the length of chain
- Proof tested

Size	Material Diameter	Inside Length	Inside Width	Working Load Limit
100'	**.79 in.**	**3 in.**	**1.16 in.**	**13,500 lbs.**
50'	**.79 in.**	**3 in.**	**1.16 in.**	**13,500 lbs.**

Specification Sheet: 3/4" 12 Strand Plaited Nylon Line

Item Number 10: ¾" 1800' 12 Strand Round Plaited Nylon Line

Special Note: Please see FAD set diagram for important assembly and packing instructions.

- Working Load Limit test and provide certification.
- Provide Splicing test certification.
- Line should be one continuos lenght
- Mitigates shock.
- Class I Line
- Nylon Line and Polypropylene Line to be spliced End to End
- Nylon Line end should be with Eye Splice and ¾" (green) Nylite Thimble attatched
- Line should be shipped in box not spooled with ends exposed ready for attachment.

INCH	MM	LBS/100 FT	KG/100 M	AVERAGE STRENGTH LBS	AVG STRENGTH KG	MIN STRENGTH LBS	MIN STRENGTH KG
							Specific Gravity 1.14
3/4	18.0	15.0	22.3	18,400	8,300	16,600	7,500

Specification Sheet: 7/8" 12 Strand Plaited Polyproplylene Line

Item Number 11: 7/8" 12 Strand Round Plaited Polyproplylene Line

3000' length used on 500 Fathom System

6000'length used on 1000 Fathom Sysytem

Special Note: Please see FAD set diagram for important assembly and packing instructions.

- Working Load Limit test and provide certification.
- Provide Splicing test certification.
- Mitigates shock
- Class I Line
- Nylon Line and Polypropylene Line to be spliced End to End
- Polypropylene Line end should be with Eye Splice and 7/8" (orange) Nylite Thimble attached
- Line should be shipped in box not spooled with ends exposed ready for attachment.

INCH	MM	LBS/100 FT	KG/100 M	AVERAGE STRENGTH LBS	AVG STRENGTH KG	MIN STRENGTH LBS	MIN STRENGTH KG
Specific Gravity 1.20							
7/8	22.0	22.6	33.6	27,600	12,500	24,800	11,300

Specification Sheet: 60" Steel Mooring Buoy

Item Number 12: 60" New Spherical 3/16" Thick Steel Mooring Buoy

Special Note: Please see FAD set diagram for important assembly and packing instructions.

- Pad Eyes Top and Bottom of Buoy
- 36" x 4" Galvanized Pipe for Light Mast Attached (welded) Atop of Buoy
- Hollow
- 3000 lbs of Bouyancy
- Primer Painted

Specification Sheet: Marine Navigational Light with Bracket

Item Number 13: Marine Navigational Light With Bracket

- 2 mile range
- 15 FPM
- Amber colored
- Light must be completely enclosed self contained
- 360 degree visibility

- LED
- Solar Powered
- Photo controled (on at sunset, off at sunrise)
- Water proof
- Maintenance free up to five years
- Steel bracket to fit over 4" light mast on buoy
- Bracket must have vent to allow gas exscape from underneaght light